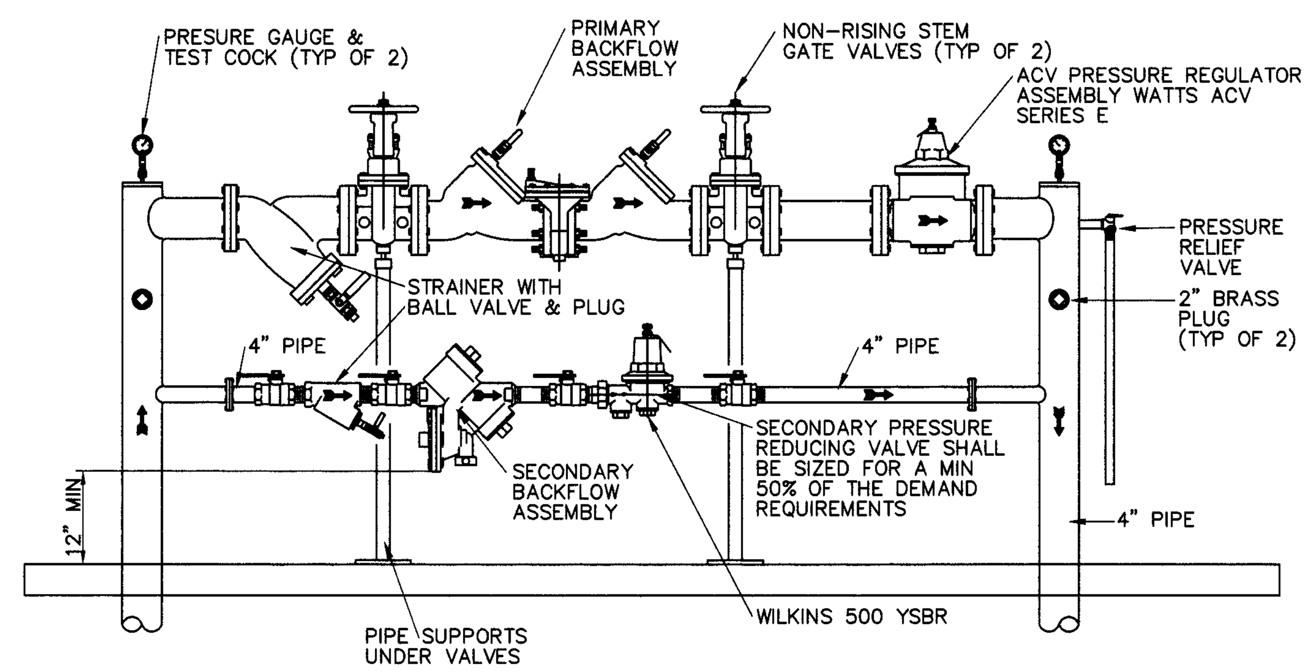

NOTES:

1. OFFSET SECONDARY BY-PASS 6" FROM PRIMARY
2. REDUCED PRESSURE BACKFLOW PREVENTER SHALL BE MODEL WATTS 909 NES, OR APPROVED EQUAL.
3. PROVIDE CHAIN LINK ENCLOSURE INSTALL AS REQUIRED PER CLARKE SALES V-PART ASSEMBLES OR APPROVED EQUAL.

1 **REDUCED PRESSURE BACKFLOW PREVENTER LAYOUT**
SCALE: NOT TO SCALE

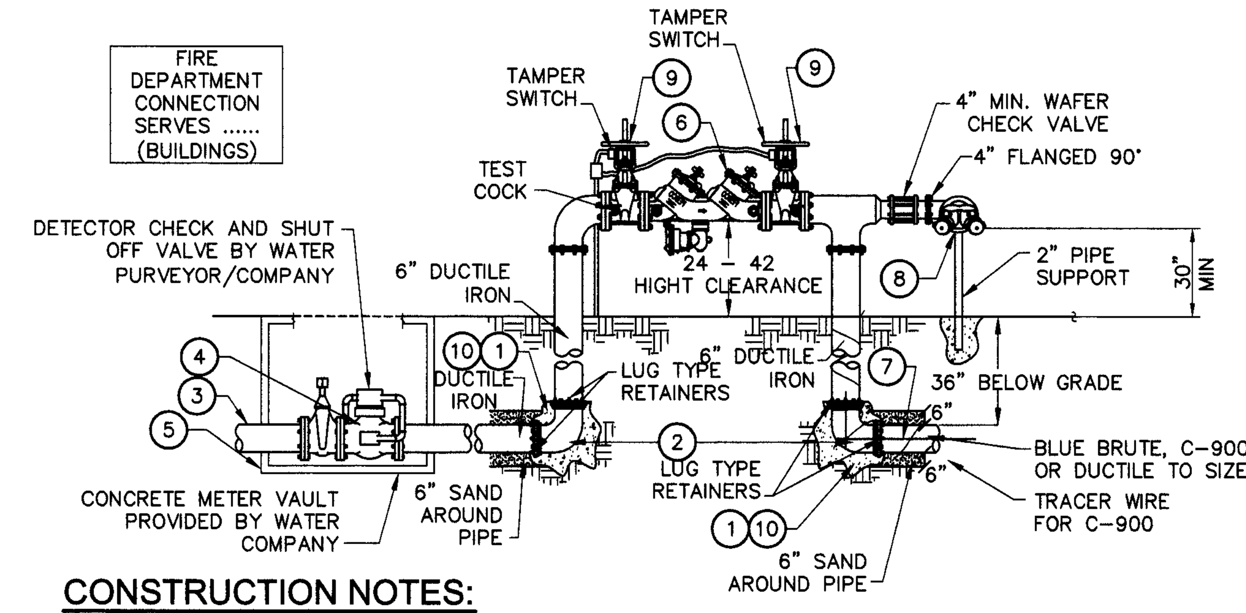

CONSTRUCTION NOTES:

1. CONCRETE THRUST BLOCK
2. DUCTILE IRON MECHANICAL FITTING
3. UNDERGROUND FIRE MAIN
4. WATER METER BY WATER PURVEYOR / COMPANY.
5. WATER METER VAULT (UNDER DIV. 2 & DIV. 3)
6. REDUCED PRESSURE BACKFLOW PREVENTER W/ OS & Y VALVES
7. PROVIDE MEGALUG RETAINER W/ FLANGE 90° FITTING FOR DUCTILE IRON/PVC PIPE
8. FIRE DEPARTMENT CONNECTIONS (UNDER DIV. 2)
9. OUTSIDE SCREW AND YOKE FLANGED GATE VALVE. RW/ TAMPER SWITCH
10. ALL APPLICABLE UNDERGROUND JOINTS SHALL BE THRUST BLOCKED WITH RESTRAINED PER NFPA 24 AND LOCAL CODES.

NOTES:

1. BACKFLOW ASSEMBLY REQUIRED FOR ALL FIRE WATER MAINS FOR METER SERVICE PROTECTION (MSP).
2. BACKFLOW ASSEMBLY AS REQUIRED BY WATER COMPANY OR BY CALIFORNIA OR LOCAL PLUMBING CODE:
3. RPA (REDUCED PRESSURE ASSEMBLY) SIZE AS REQUIRED – AMES 5000 SS DA, WITH TAMPER SWITCHES CONNECTED TO FIRE ALARM.

2 **REDUCE PRESSURE TYPE DOUBLE DETECTOR CHECK ASSEMBLY**
SCALE: NOT TO SCALE

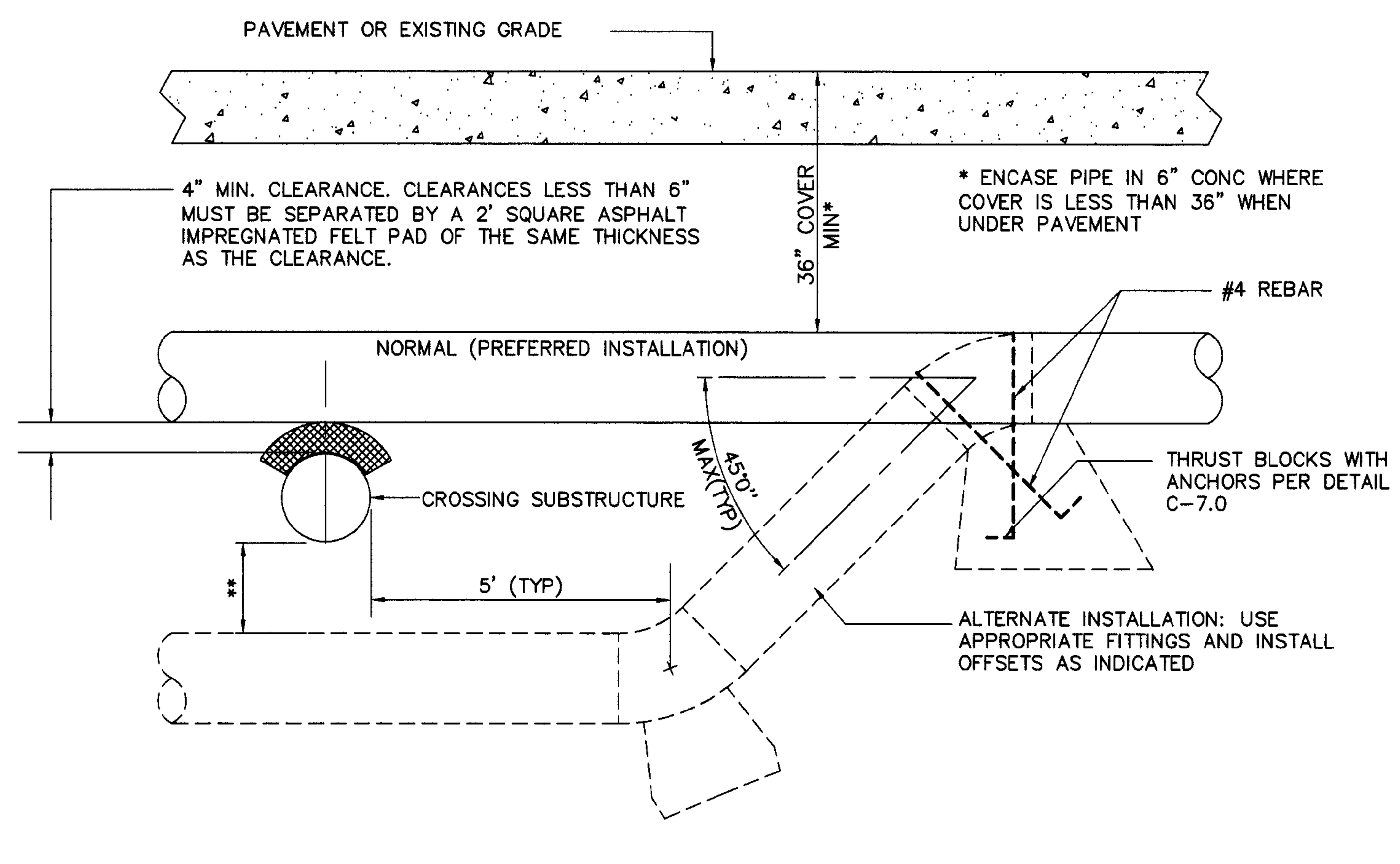

** 6" MIN. CLEARANCE FOR 12" DIA. AND SMALLER PIPE 12" MIN. CLEARANCE FOR LARGER THAN 12" DIA. PIPE

3 **ALTERNATIVE PIPE INSTALLATION FOR VERTICAL OBSTRUCTION**
SCALE: NOT TO SCALE

NOTES

1. BARRICADES, FENCES, WALLS, LANDSCAPING, ETC. SHALL NOT BE INSTALLED OR PLANTED WITHIN 3' OF A HYDRANT.
2. FIRE HYDRANT SHALL BE ONE OF THE FOLLOWING
   A. CLOW / RICH – NO. 550, 555 OR 850.
   B. JAMES JONES – NO. J3700 – FLUTED BARREL
   C. MUELLER – A480 – E
3. HYDRANT SHALL BE SUPPLIED WITH 2-1/2" x 4" OUTLETS AND 1-1/4" OR 1-3/4" PENTAGON NUTS ON CUPS AND OPERATING VALVES.
4. HYDRANT SHALL BE PAINTED WITH O.S.H.A. SAFETY YELLOW AMERITONE 719 OR APPROVED EQUAL.
5. HYDRANT BURY, VALVE AND TEE SHALL HAVE EITHER RING-TITE JOINTS OR MECHANICAL JOINTS COMPATIBLE WITH PIPE MATERIAL USED.
6. ALL PIPE AND FITTINGS FOR HYDRANT INSTALLATION SHALL BE CLASS 200.

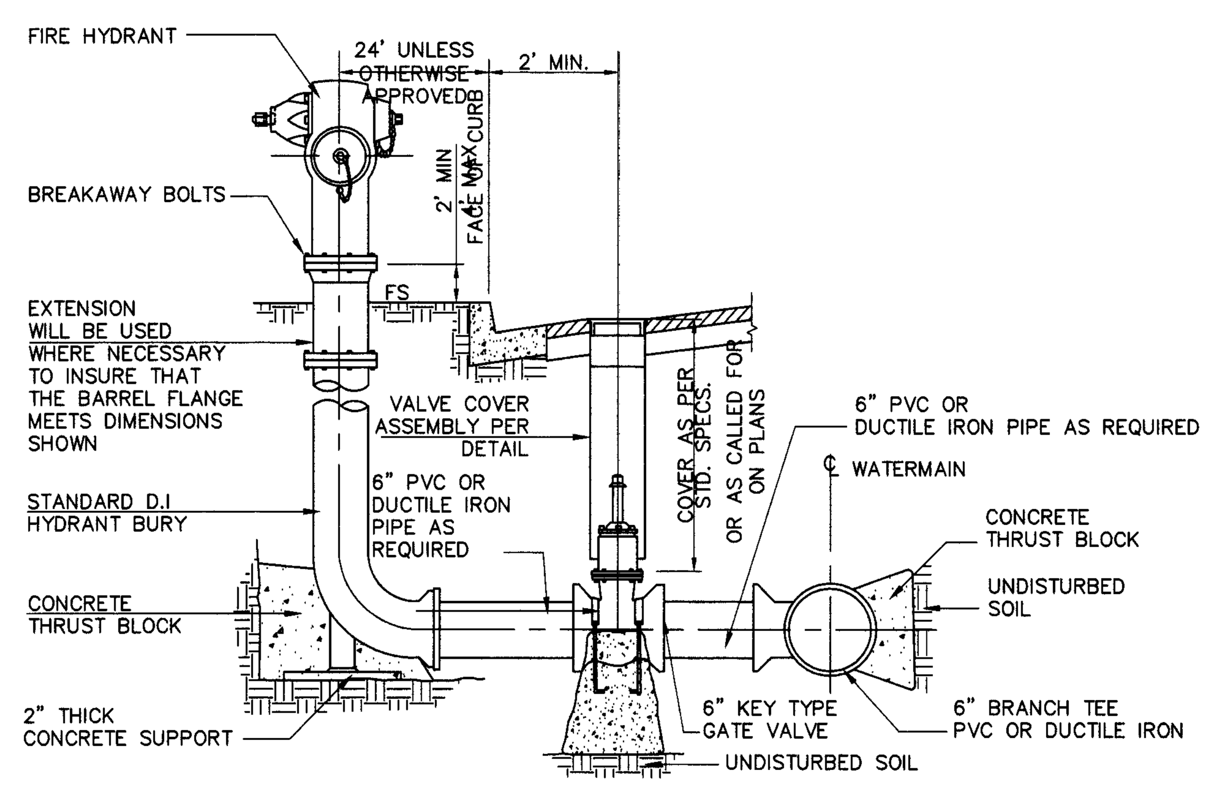

4 **FIRE HYDRANT DETAIL**
SCALE: NOT TO SCALE

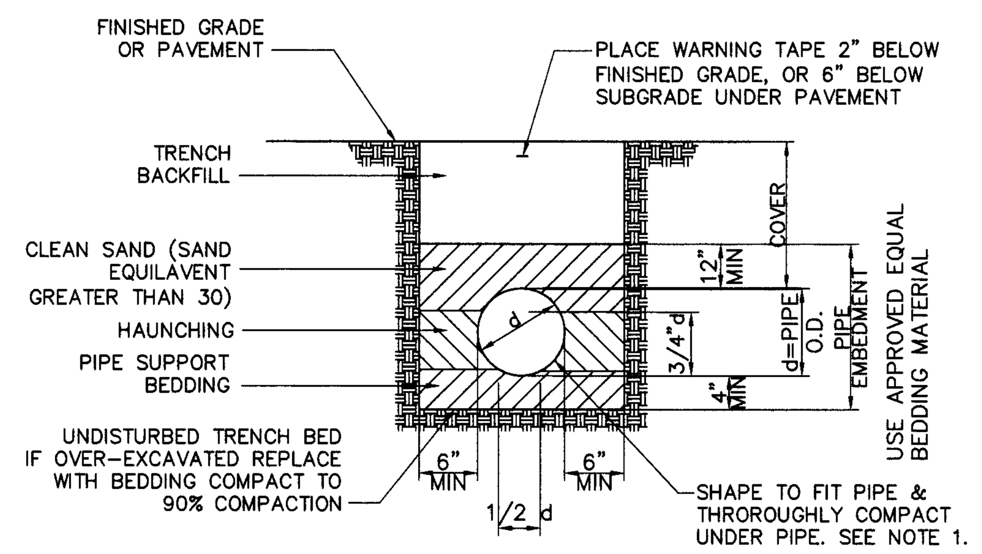

PIPE : FOR GRAVITY FLOW SAN. SEWER AND DRAINAGE PVC CONFORMING TO ASTM D-3034 MAXIMUM SDR 35, GASKETED JOINTS, 15" DIA. MAXIMUM PIPE SIZE

BEDDING CLEAN COARSE SAND
*INITIAL BACKFILL APPROVED GRANULAR SOIL MATERIAL – MAXIMUM SIZE NOT TO EXEED 1-1/2" TRENCH BACKFILL APPROVED GRANULAR SOIL MATERIAL 90% COMPACTION

LOAD CONDITION	COVER	BEDDING MATERIAL
NON-TRAFFIC	2' MIN TO 5.0'	APPROVED GRANULAR SOIL MATERIAL-MAX SIZE NOT TO EXCEED 1/2"
NON-TRAFFIC	2' TO 18.0'	CLEAN COARSE SAND
TRAFFIC	2.5' MIN TO 18.0'	CLEAN COARSE SAND

CLEAN COURSE SAND: SHALL CONFORM TO THE REQUIREMENTS OF SAND FOR PORTLAND CEMENT CONCRETE AS SPECIFIED IN SECTION 200-1.5.5 OF THE STANDARD SPECIFICATIOS FOR PUBLIC WORKS CONSTRUCTION, LATEST EDITION.

NATIVE MATERIAL: UP TO CLASS IV SOILS, TYPE ML, CL, FINE GRAINED, LL < 50, MEDIUM TO NO PLASTICITY

* NOTE: FOR CLASS IV SOIL, TYPE MH OR ALL CLASS V SOILS, USE CLEAN COARSE SAND.

COMPACTION: PIPE EMBEDMENT AND TRENCH BACKFILL SHALL BE COMPACTED IN ACCORDANCE WITH SECTION 306-1.3 OF THE STANDARD SPECIFICATIONS FOR PUBLIC WORKS CONSTRUCTION, LATEST EDITION. WATER DENSIFIED BACKFILL SHALL NOT BE USED UNLESS APPROVED BY THE SOILS ENGINEER.

NOTES

1. EXCAVATE FOR BELLS OR HUBS SO FULL LOAD IS CARRIED BY PIPE BARREL.
2. HAUNCHING MATERIAL SHALL BE PLACED IN A MANNER SUCH AS SLICING SHOVEL-SPADING OR SHOVEL RODDING TO INSURE COMPLETE FILLING OF THE "HAUNCH AREAS" BELOW THE PIPE. (JETTING OF SAND MATERIAL IS NOT REQUIRED).

5 **BEDDING DETAIL**
SCALE: NOT TO SCALE

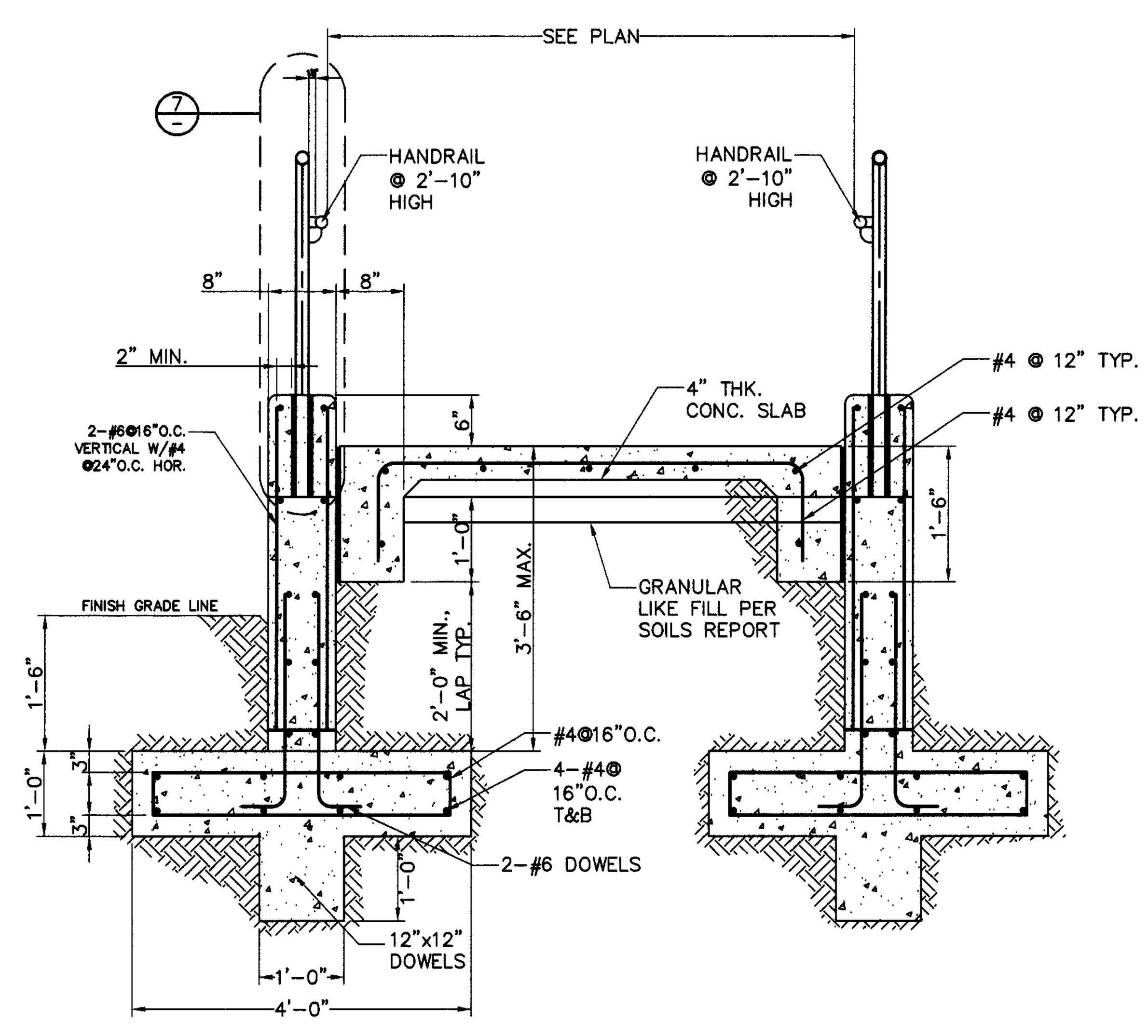

6 **HANDRAIL & RAMP DETAIL**
SCALE: NOT TO SCALE

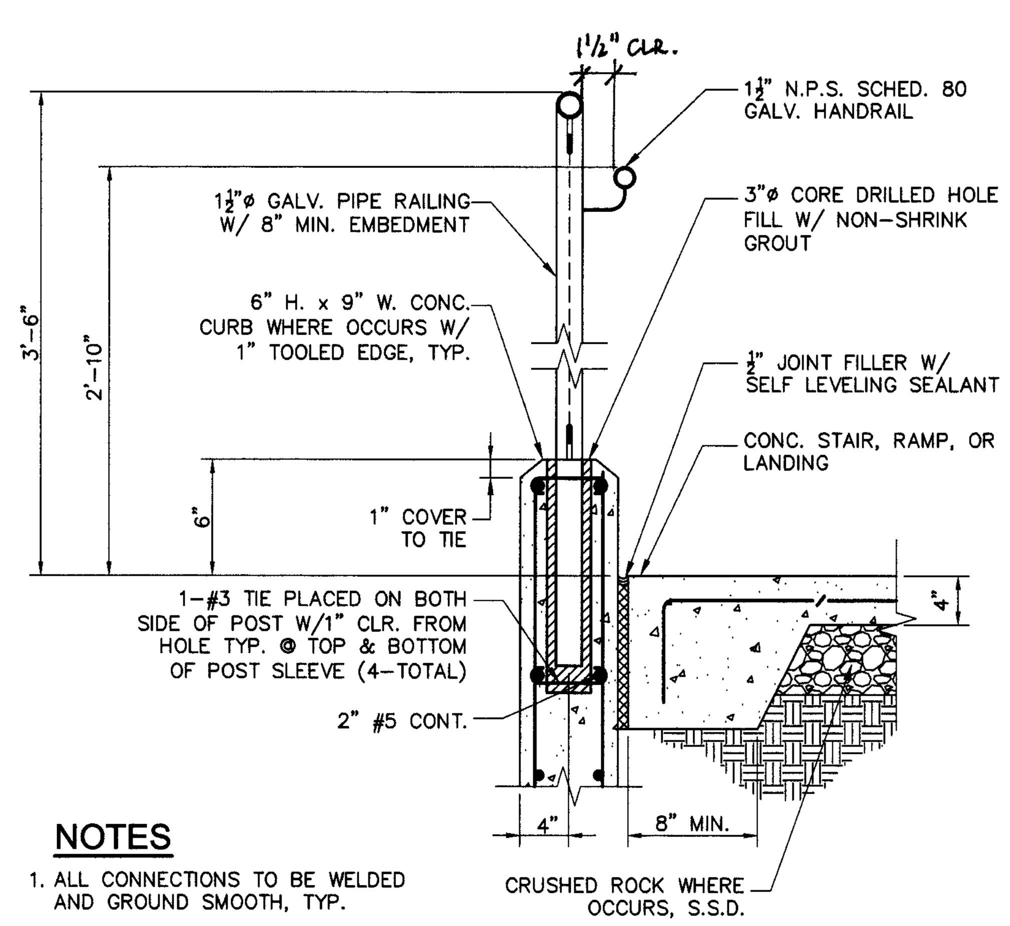

NOTES

1. ALL CONNECTIONS TO BE WELDED AND GROUND SMOOTH, TYP.
2. GALVANIZE RAILINGS IN AS LARGE A SECTION AS POSSIBLE.

7 **VERTICAL POST @ RAMP CURB**
SCALE: NOT TO SCALE

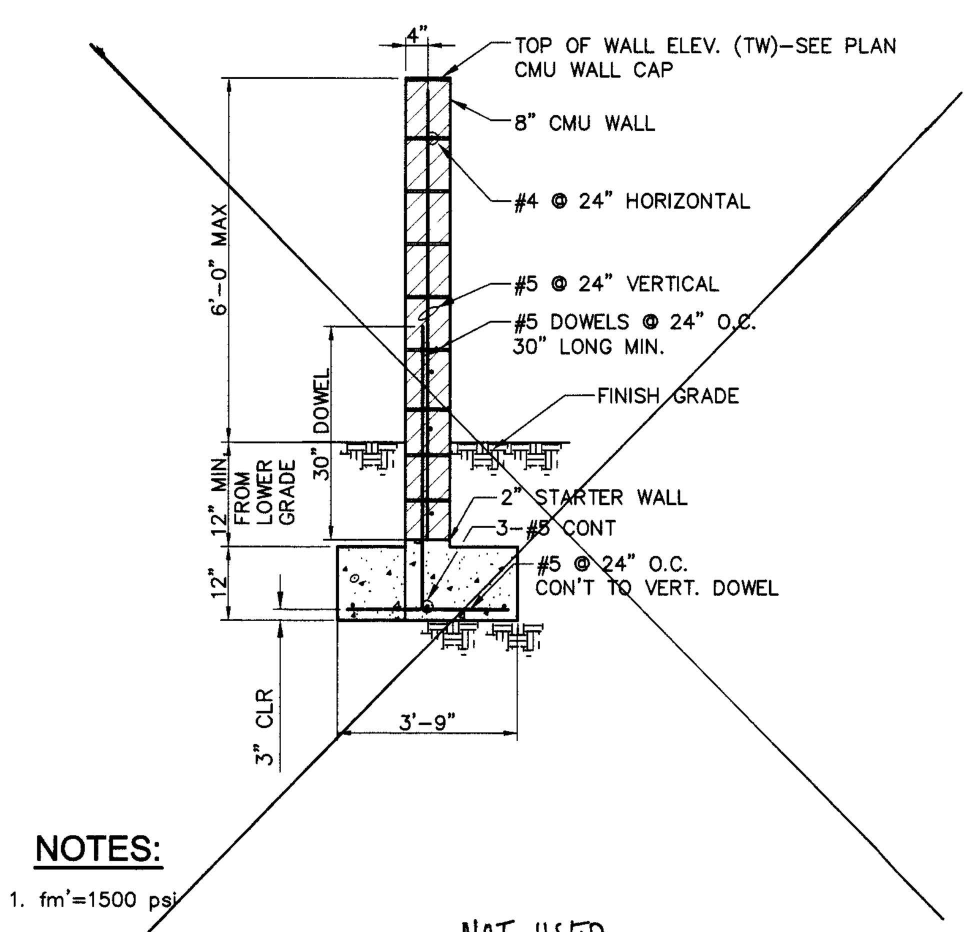

NOTES:

1. fm'=1500 psi
2. fy=60 ksi REBAR
3. fc'=3000 psi CONCRETE
4. REFER TO APWA STD. PLAN FOR CONSTRUCTION JOINTS, CONTROL JOINTS/EXPANSION JOINTS DETAILS.

NOT USED

8 **CMU WALL DETAIL**
SCALE: NOT TO SCALE

tBP architecture planning interiors management

tBP/Architecture
5455 Wilshire Boulevard, Suite 1200
Los Angeles, CA 90036-4242
ph: 323. 556. 3788 fx: 323. 556. 3799

LICENSED ARCHITECT — STATE OF CALIFORNIA

architect

VCA ENGINEERS INC. CIVIL • STRUCTURAL
3951 Medford Street Los Angeles, CA 90063
Tel. 323.729.6098 Fax. 323.729.6043
VIRGILIO C. AOANAN, RCE36079
DATE 07/31/09
REGISTERED PROFESSIONAL ENGINEER VIRGILIO C. AOANAN No. C36079 Exp. 6/30/10 CIVIL STATE OF CALIFORNIA

consultant

IDENTIFICATION STAMP
DIV. OF THE STATE ARCHITECT
OFFICE OF REGULATION SERVICES
File No. 19-C11
Appl No. 03-112201
AC MB FLS AL SS SPA
DATE 10-13-09

DSA Los Angeles Basin Regional Office
700 North Alameda Street, Suite 5-500
Los Angeles, California 90012
ph: 213/897-3995 fx: 213/897-3159/0726

agency

ANTELOPE VALLEY COLLEGE
HEALTH & SCIENCE BUILDING

Antelope Valley Community College District
3041 West Avenue K
Lancaster, CA 93536-5426

owner

tBP project number : 20641.00
file name:
drawn by: AL checked by: VCA
date: JULY 30, 2009 - 100% CD
Rev: date: description:

THIS DRAWING AND THE DESIGNS, DEPICTIONS, IDEAS AND OTHER INFORMATION CONTAINED HEREIN CONSTITUTE UNPUBLISHED WORK OF tBP/ARCHITECTURE AND SHALL REMAIN THE PROPERTY OF tBP/ARCHITECTURE IN PERPETUITY. NO PART THEREOF SHALL BE REPRODUCED, DISCLOSED, DISTRIBUTED, SOLD, PUBLISHED OR OTHERWISE USED IN ANY WAY WITHOUT THE ADVANCED EXPRESS WRITTEN CONSENT OF tBP/ARCHITECTURE.

drawing title:
MISCELLANEOUS DETAILS

drawing no:
C-7.10
drawing 11 of 15